<1>	SAFETY CHARACTERISTICS	0
<2>	SIGNIFICANT CHARACTERISTICS	0
<CI>	CUSTOMER INTERFACE	6

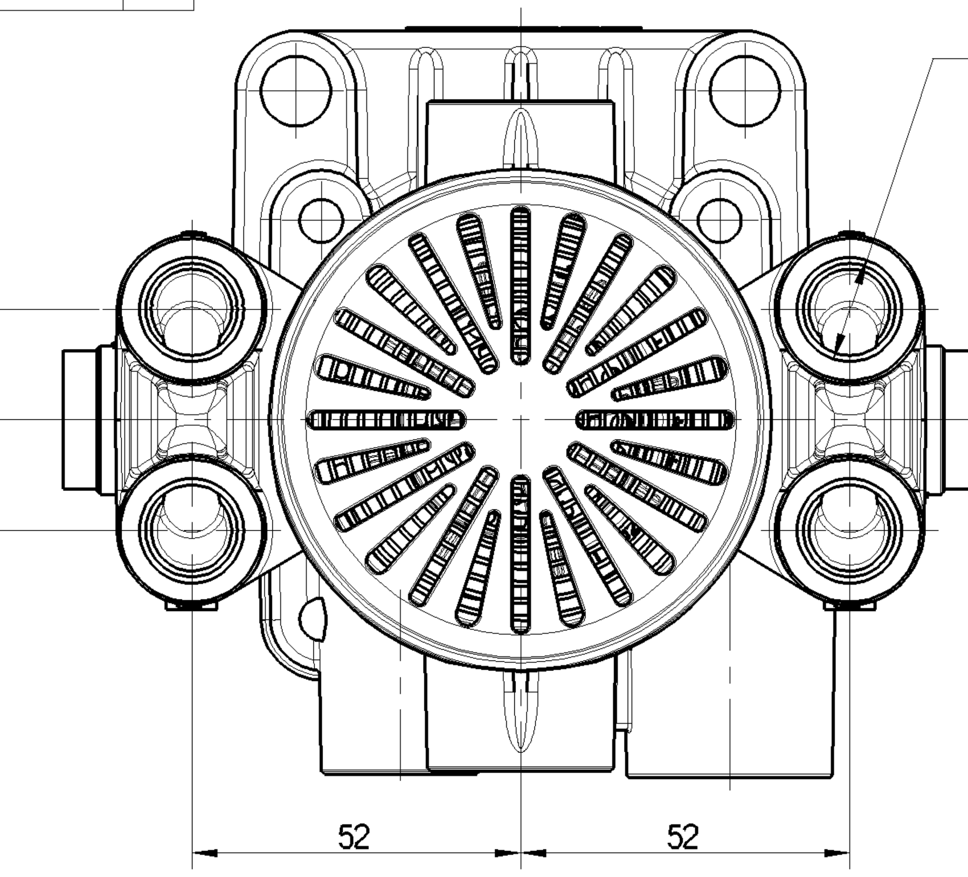

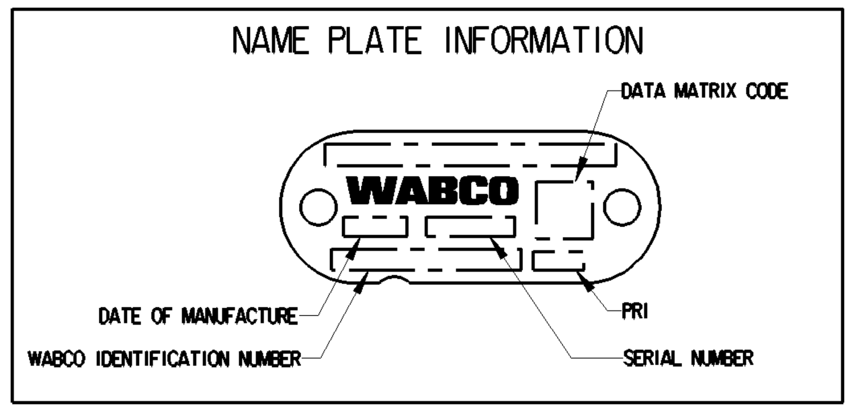

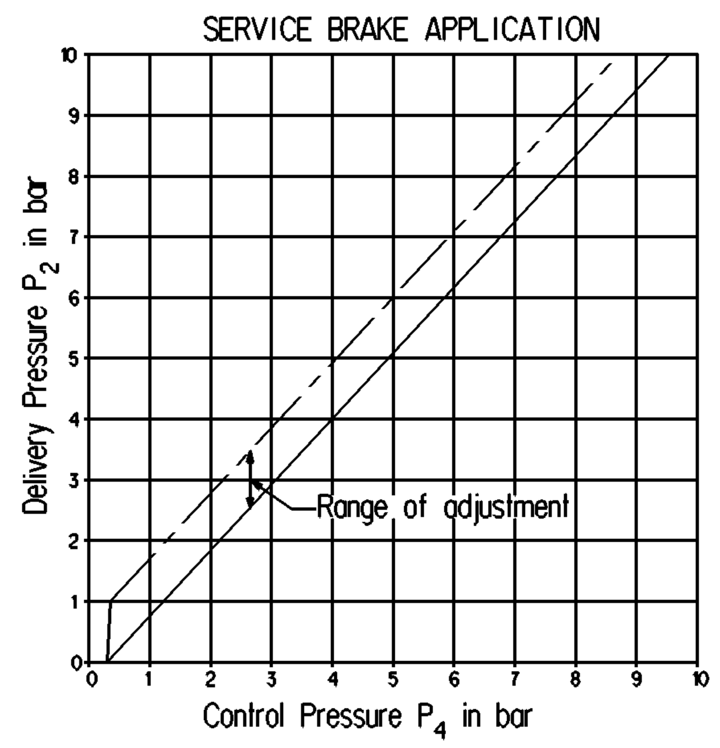

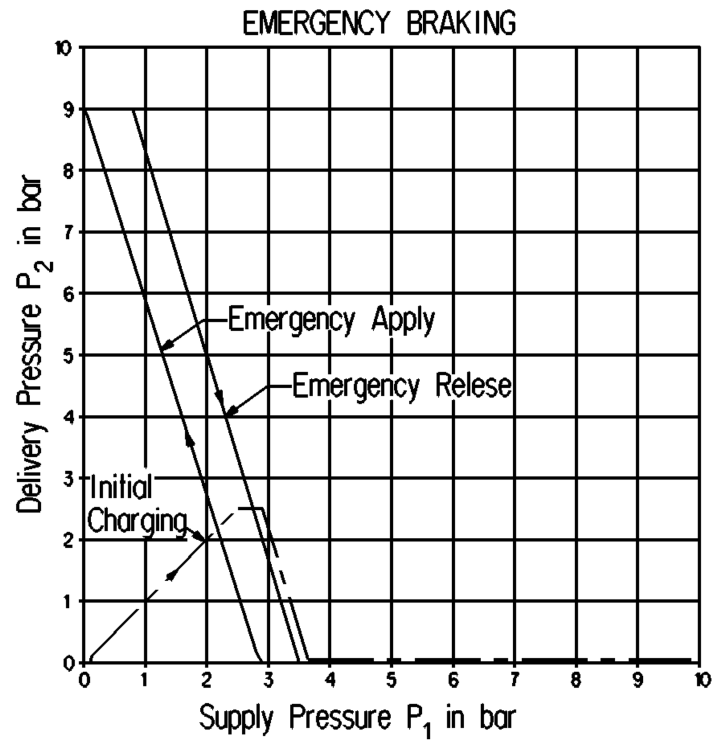

	WORKING MEDIUM	AIR
	THERMAL RANGE OF APPLICATION	-40° TO +65°C
	SHORT TERM RESISTANCE TO HEAT	MAX. 1h AT 110°C
	NOMINAL WORKING PRESSURE	9 bar
	MAXIMUM WORKING PRESSURE	10 bar
	PREDOMINANCE ADJUSTMENT RANGE PRESSURE	0 TO 0.7 bar
	FILLING CRACK-OFF	0.5 bar MAX.
	RELAY RATIO	>1
	CRACK-OFF PRESSURE (WITHOUT PREDOM)	0.3 bar MAX. (+65°C TO -20°C) 0.35 bar MAX. (-20°C TO -40°C)
	INSTALLATION POSITION	VERTICAL ±60° ALLOWED
PORT DESIGNATION	1	SUPPLY PORT
	1-2	RESERVOIR PORT
	2 (4x)	DELIVERY PORT
	4	CONTROL PORT
	TIGHTENING TORQUE FOR MOUNTING BOLTS	45±2 Nm

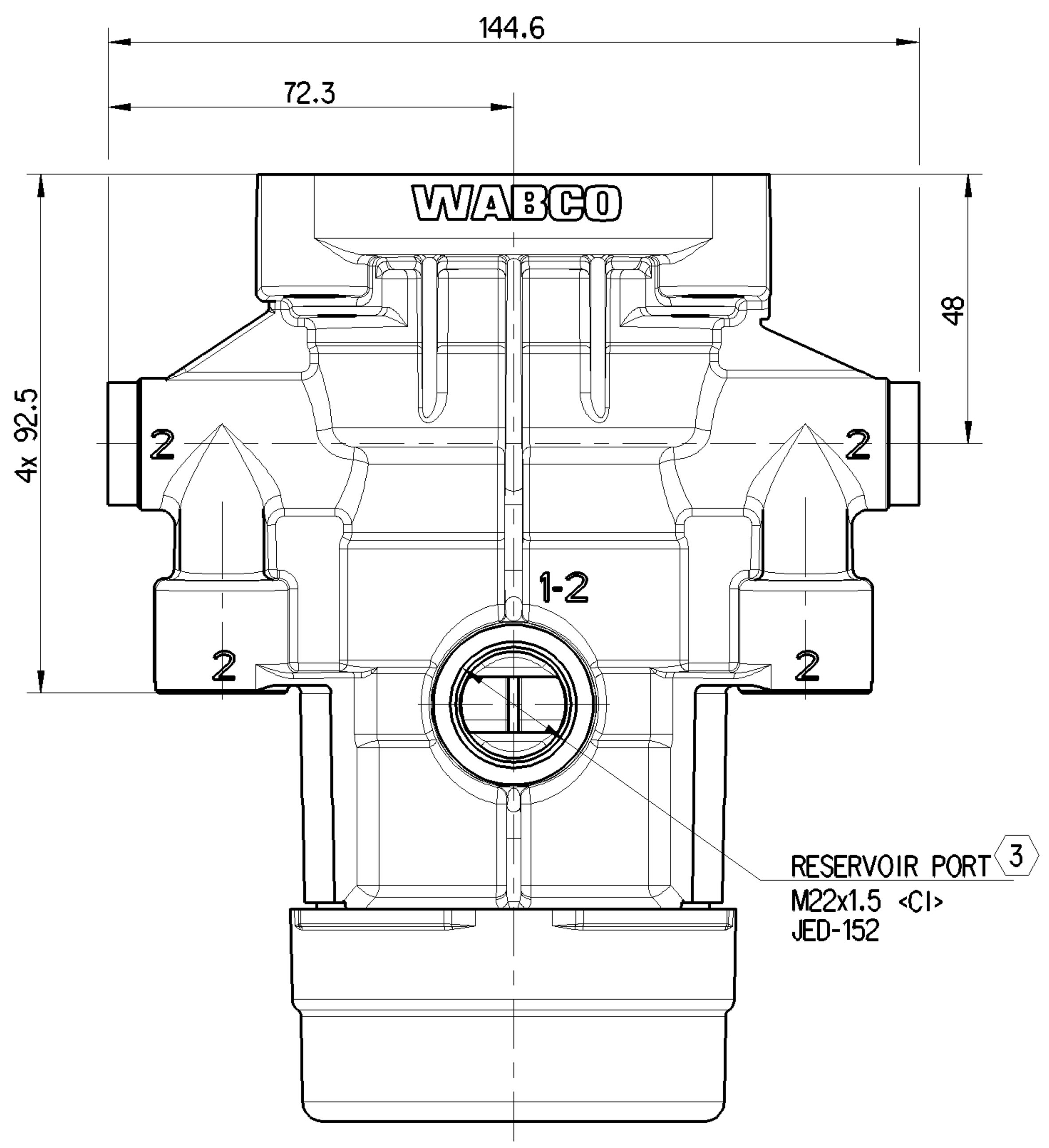

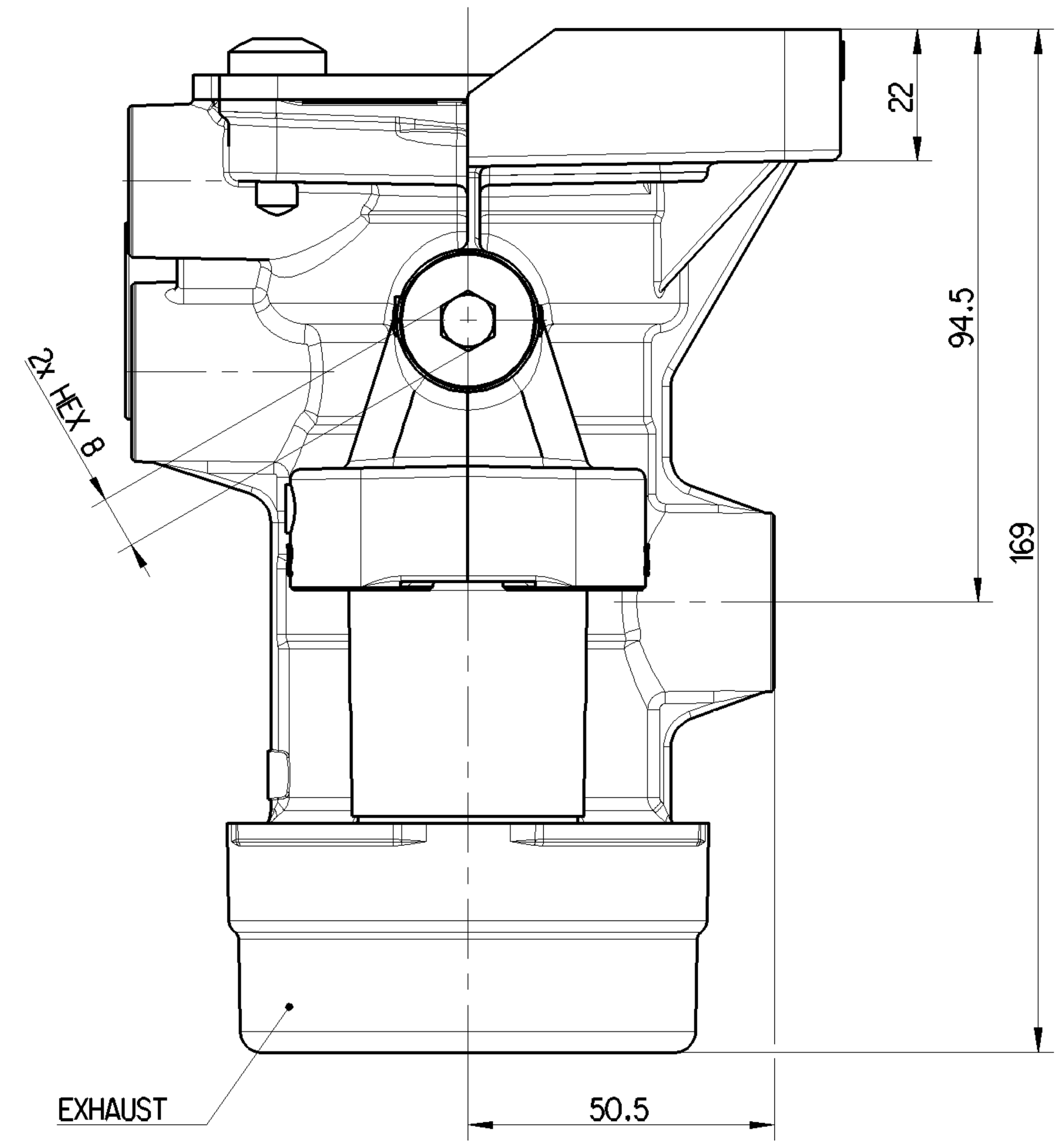

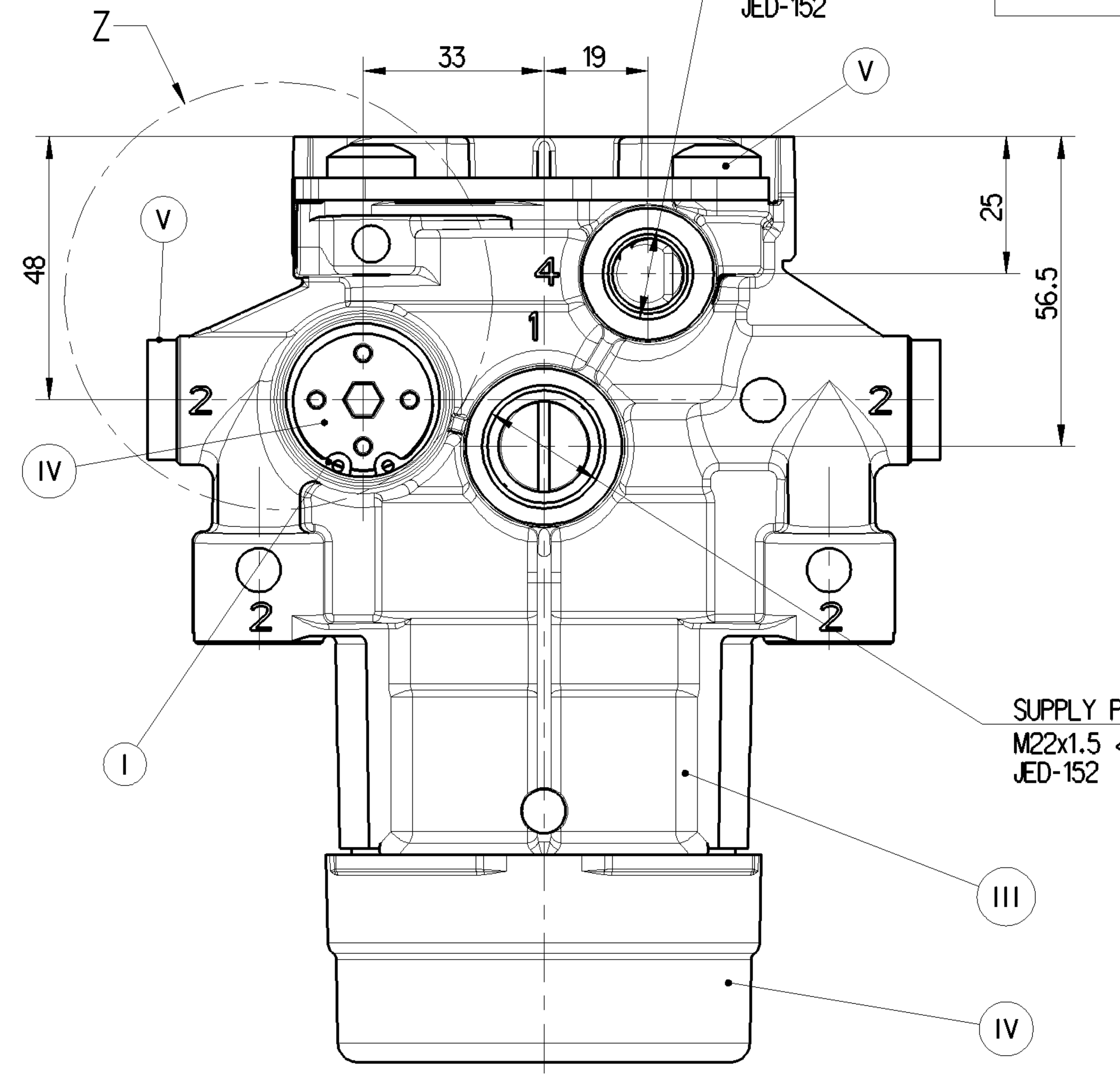

CONDITION	FROM	TO	NOMINAL DIAMETER
FILLING	PORT 1	PORT 1-2	≥10 mm
BRAKING	PORT 1-2	PORT 2	≥11.5 mm
EXHAUSTING	PORT 2	PORT 3	≥10.6 mm

PART CODE	MATERIAL	SURFACE PROTECTION
V	STEEL	ZINC NICKEL PLATED
IV	PLASTIC	NO TREATMENT
III	ALUMINIUM ALLOY	CHROMATED
II	STEEL	POWDER COATED
I	STEEL	ZINC PLATED

NOTE:

1 PREDOMINANCE ADJUSTMENT

RECOMMENDED TORQUE FOR FITTINGS:

2 THREAD-M16x1.5, TIGHTENING TORQUE: 30 TO 35 Nm

3 THREAD-M22x1.5, TIGHTENING TORQUE: 34 TO 40 Nm

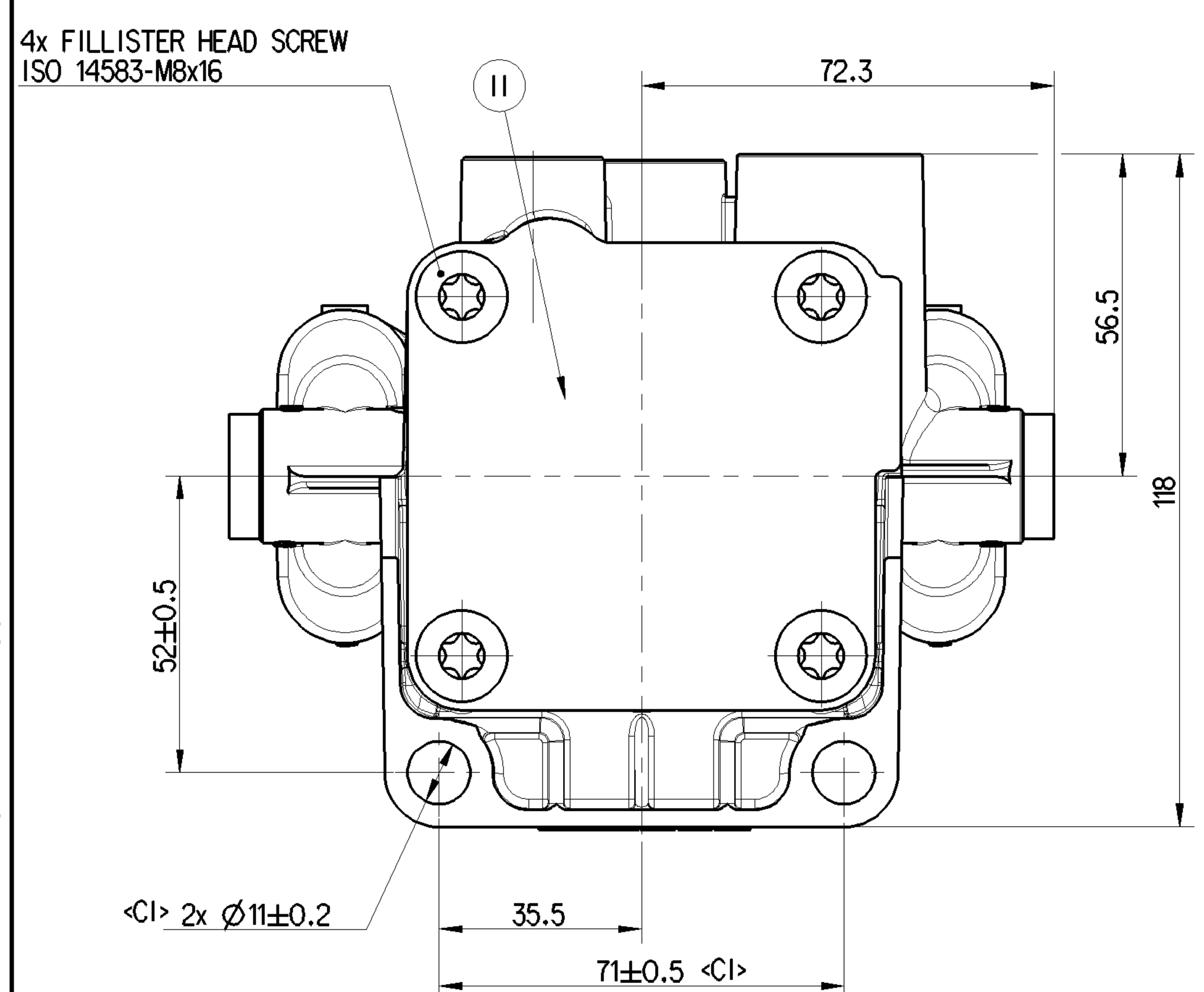

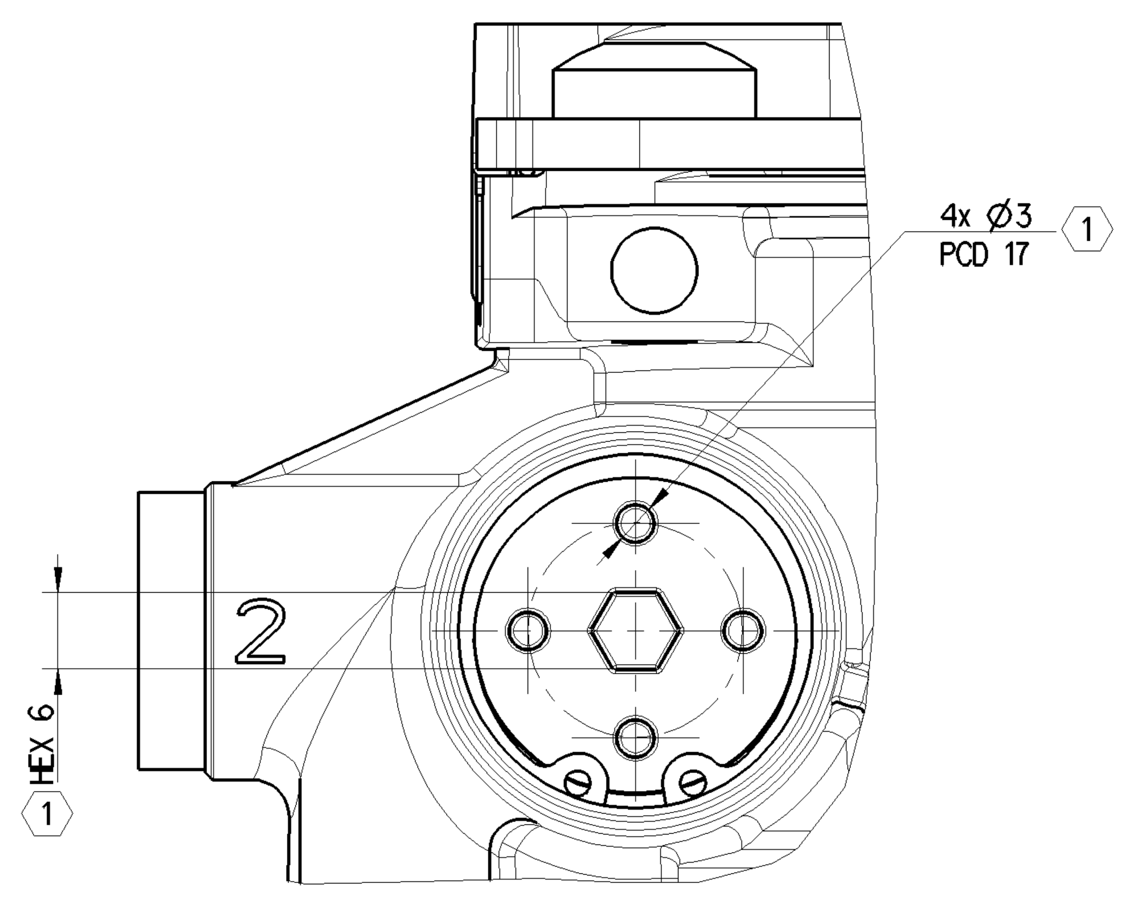

Z
2:1

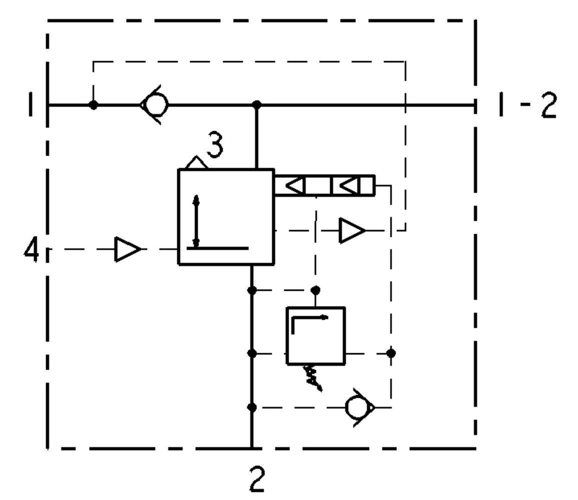

SYMBOL

General Specification: JED-334-1 , Size ISO 14405 LP							
Further Technical Data: 971 002 049 0							
Doc. Code: 035			Sheet: 1 To 56				
General Tolerances JED-261							
Class 1)		Range of Nominal Dimensions (± mm) ≤ 50	> 50 ≤ 180	> 180 ≤ 400	> 400	∢	
Fine		0.5	1.0	1.5	2.0		
Medium	X	1.0	2.0	3.0	4.0	±3°	
Coarse		2.0	3.5	5.0	6.5		
Tapped Holes acc.							
1) Tolerance Class Applied Crossmarked							

Copyright WABCO®		WABCO			
Date	Signature	RELAY EMERGENCY VALVE 4 PORT BASIC VARIANT			
Drawn					
2021-05-31	M S				
Checked					
2021-07-29	Szyszka				
Expert					
Ponmurugaraj C					
Mass	Scale	Material No.	Date of first issue: 2019-08-20		
1.321 KG	1:1 2:1	971 002 040 0	Doc.Code	Language	Sheet
			005	EN	1/1
Size	CAD System	ECN-No.	Revision	Techn. Resp.	Replacement for
A 1	CREO	507805	- A	5250	-

100mm

Toute Communication ou reproduction de ce document, toute exploitation ou communication de son contenu sont interdites, sauf autorisation expresse. Tout manquement a cette regle constitue un abus evident et expose son auteur au versement de dommages et interets. Tous droits de propriete industrielle reserves, notamment en matiere de brevets et de modeles.
Weitergabe sowie Vervielfaeltigung dieser Unterlage, Verwertung und Mitteilung ihres Inhalts nicht gestattet, soweit nicht ausdruecklich zugestanden. Zuwiderhandlungen stellen einen offensichtlichen Missbrauch dar und verpflichten zu Schadenersatz. Alle Rechte fuer den Fall der Patenterteilung oder Gebrauchsmuster-Eintragung vorbehalten.
Non e permesso consegnare a terzi o riprodurre questo documento, ne utilizzarne il contenuto o renderlo comunque noto a terzi senza autorizzazione esplicita. Ogni infrazione costituira un evidente abuso e comportera il risar cimento dei danni subiti. E'fatta riserva di tutti i diritti derivanti da brevetti o modelli.
Copying of this document and giving it to others and the use or communication of the contents thereof, are forbidden without express authority. Contravention of this restriction will constitute an evident abuse and result in a liability to the payment of damages. All rights are reserved in the event of the grant of patent or registration of a utility model or design. This document is the subject of copyright.