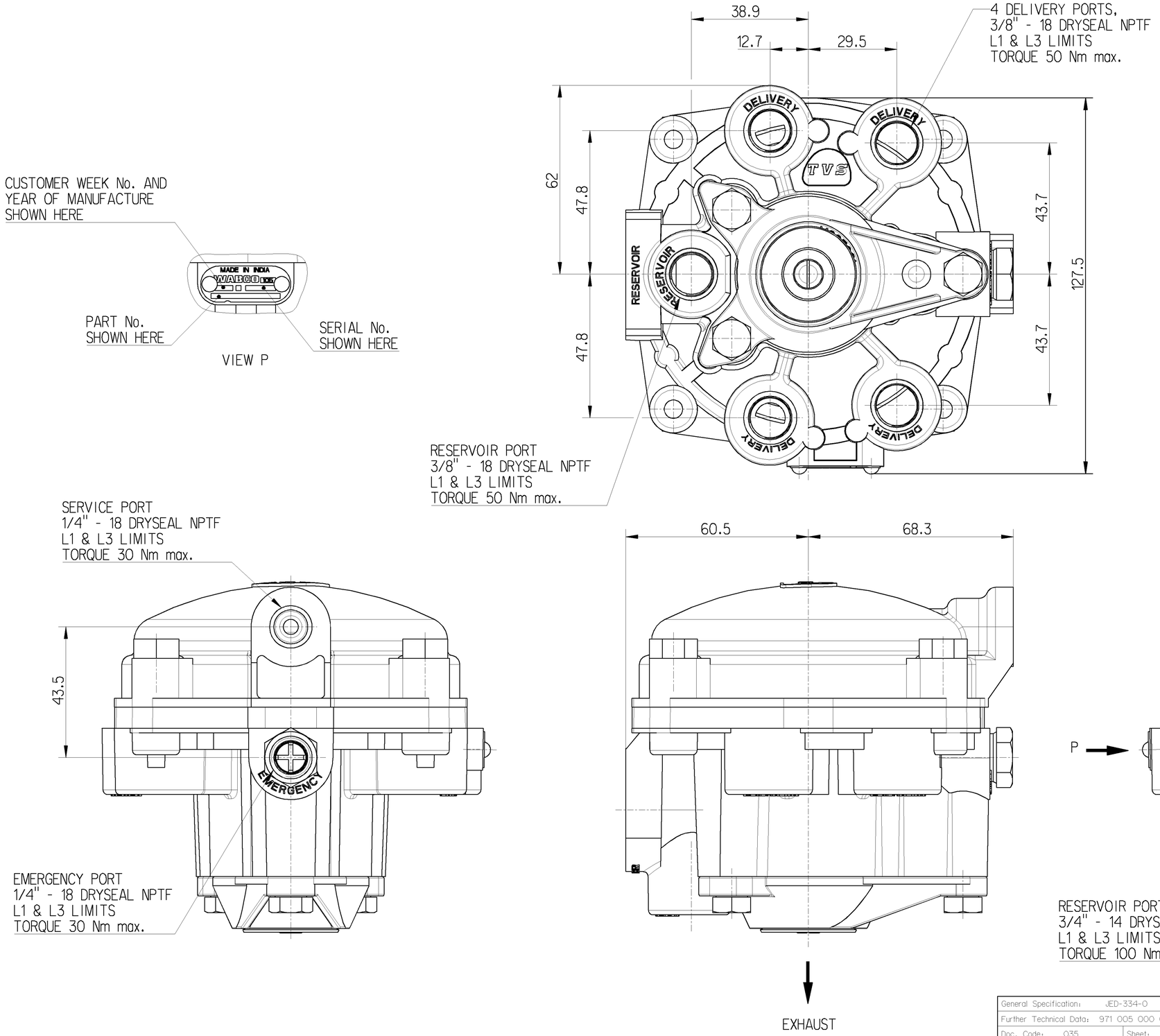

TECHNICAL DATA:

WORKING MEDIUM : AIR

THERMAL RANGE OF APPLICATION : -40°C TO +80°C

MAX WORKING PRESSURE : 9.4 bar

OPEN PORTS ARE FITTED WITH CLOSURE PLUGS FOR STORAGE AND TRANSIT PURPOSES

DCN-No.	Rev.	Date

State of Revision

General Specification: JED-334-0					
Further Technical Data: 971 005 000 0					
Doc. Code: 035		Sheet: 1 To 7			
General Tolerances JED-261					
	Range of Nominal Dimensions (± mm)				
Class 1)	≤ 50	> 50 ≤ 180	> 180 ≤ 400	> 400	∢
Fine	0.5	1.0	1.5	2.0	
Medium	1.0	2.0	3.0	4.0	±3°
Coarse	2.0	3.5	5.0	6.5	
Tapped Holes acc.					
1) Tolerance Class Applied Crossmarked					

Copyright WABCO ®

	Date	Signature
Drawn	2007-11-21	S.MAGESH
Checked	2007-11-21	A.GANASAMOORTHY
Expert	SZYSZKA	

WABCO

RELAY EMERGENCY VALVE - RE6

Mass	Scale	Material No.	WABCO Id. No.: 971 005 002 0		
1.7 KG	1:1	971 005 002 0	Doc.Code 005	Language en	Sheet 1/1
Size A 2	TRI 540				

Function Code	CAD System	Prod.Type	Replacement for
	Pro/E	0 1 X	M302614

100mm

Tout Communication ou reproduction de ce document, toute exploitation ou communication de son contenu sont interdites, sauf autorisation expresse. Tout manquement à cette règle constitue un délit et expose son auteur au versement de dommages et intérêts. Tous droits de propriété industrielle réservés, notamment en matière de brevets et de modèles.

Weitergabe sowie Vervielfältigung dieser Unterlage, Verwertung und Mitteilung ihres Inhalts nicht gestattet, soweit nicht ausdrücklich zugestanden. Zuwiderhandlungen verpflichten zu Schadensersatz. Alle Rechte für den Fall der Patenterteilung oder Gebrauchsmuster-Eintragung vorbehalten.

Non è permesso consegnare a terzi o riprodurre questo documento, ne utilizzarne il contenuto o renderlo comunque noto a terzi senza autorizzazione esplicita. Ogni infrazione costituirà un evidente abuso e comporterà il risarcimento dei danni subiti. E'fatta riserva di tutti i diritti derivanti da brevetti o modelli.

Copying of this document and giving it to others and the use or communication of the contents thereof, are forbidden without express authority. Contravention of this restriction will constitute an evident abuse and result in a liability to the payment of damages. All rights are reserved in the event of the grant of patent or registration of a utility model or design. This document is the subject of copyright.